MEYRA GROUP

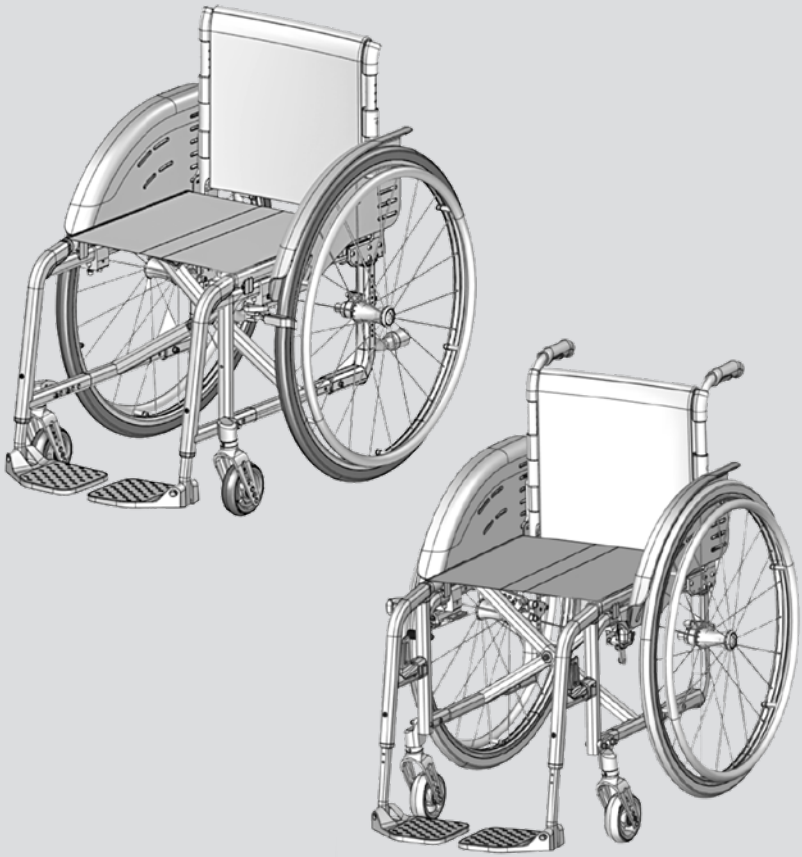

CE EN

OPERATING MANUAL

1.185 FEMTO X / 1.186 FEMTO S Adaptive wheelchairs

MEYRA



Users with visual impairments can find the PDF-files together with further information on our website:

< *www.meyra.com* >.

➔ Contact your specialist dealer when required.

Alternatively users with visual impairments can have the documentation read out by a helper.

Inhalt

Meaning of the applied markers 7
Introduction 7
List of models 7
Indications / contraindications 7
Acceptance 8
Intended purpose 8
Use 8
Wheelchair folding/unfolding/carrying 9
Adjustment 9
Combination with manufacturer foreign products 10
Reinstallment 10
Life span 10
Overview 11
Model 1.185 11
Overview 12
Model 1.186 12
Brake 13
Pressure brake - user 13
Locking the brakes 13
Releasing the brakes 13
Service brake 13
Light pressure brake, swivelling 14
Locking the brakes 14
Releasing the brakes 14
Service brake 14
Drum brake for accompanying persons 15
Function as operating brakes 15
Locking the drum brakes 15
Loosen the drum brakes 15
Brake lever extension 16
One-hand brake 16
Particularity of the one hand brake 16

Leg supports 17
Calf belt 17
Removing the calf belt 17
Attaching the calf belt 17
Length adjustment of the calf belt 17
Footrest 18
Folding the footrest up 18
Folding the footrest down 19
Folding the footboard down 19
Upper leg support, model 1.186 20
Turning the leg supports to the side 20
Swivelling in the leg supports 21
Removing the leg supports 22
Attaching the leg supports 22
Mechanically height-adjustable leg supports 23
Lifting/lowering the leg support 23
Lifting/lowering the amputee leg support 23
Arm supports 24
Removing the arm support 24
Inserting the arm support 24
Swivelling up the arm support 25
Height adjustment of the arm support 25
Sidebar 26
Removing the sidebar 27
Attaching the sidebar 27
Swivelling the sidebar toward the rear 27
Clothes guard 28
Back support 29
Folding over the back support 29
Folding up the back support 29
Back support belt 30
Fitting the back belt 30
Removing the back support upholstery 31
Placing the back support upholstery 31

Push handles 32
Push handles with clamping device 32
Height adjustment 32
Angle adjustment 32
Extracting/inserting 32
Special features of the clamping lever 32
Swivel away push handles 33
Swivelling away the push handles 33
Swivelling up the push handles 33
Wheels 34
Drive wheels 34
Tyre damage on pneumatic tyres 34
Hand and spoke guard 35
Handrim 35
Handrim distance 35
Specialities for double handrims 36
Propelling the wheelchair 36
Folding/unfolding with double handrims 36
Support castors 37
Swivel away support castors 37
Swinging the support castors 37
Retaining strap 38
Therapy table 39
Basic safety information 40
Accompanying person 40
Transfer out of the wheelchair 40
Reaching for objects 40
Driving on falling, rising or transverse gradients 41
Crossing obstacles 41
Loading the wheelchair 42
Transport in vehicles 42
Transport safety of the empty wheelchair 43
Transport of people inside a motor vehicle 43
Transport in public methods of transportation 43
Driving on public highways 43

Cleaning 44
Finish 44
Disinfection 45
Repairs 45
Repairs 46
Customer Service 46
Spare parts 46
Information for extended pauses of use 46
Disposal 46
Maintenance 47
Maintenance 47
Maintenance schedule 47
Technical data 49
Short form of wheelchair dimensions: 49
Calculation of the max. user weight: 49
Tyre pressure of pneumatic tyres 49
Full tyre pressure – steering wheel 49
Full tyre pressure – drive wheel 49
Applied norms 50
Data according to ISO for model 1.185 FEMTO X 51
Further technical data for model 1.185 FEMTO X 52
Data according to ISO for model 1.186 FEMTO S 53
Further technical data for model 1.186 FEMTO S 54
Meaning of the symbols on the washing instruction 55
Meaning of the labels on the wheelchair 56
Meaning of the symbols on the type plate 57
Inspection certificate 58
Warranty / Guarantee 59
Warrantee / Guarantee section 60
Inspection certificate for transfer 60
Notes 61

MEANING OF THE APPLIED MARKERS

Safety instructions with a coloured background are mandatory and need to be observed under any circumstance!

➔ This symbol indicates tips and recommendations.

[ ] Reference to a picture number.

( ) Reference to a function element within a picture.

INTRODUCTION

Read and observe this manual before first operation.

If needed have this document read to you by a supervising or accompanying person.

Your specialist dealer should also introduce you into the use of your wheelchair.

This operating manual is to help you get accustomed to the handling of the wheelchair as well as to prevent accidents.

➔ Please note that the illustrated equipment variants can deviate from your model.

We have therefore also listed chapters with options that might not be applicable for your individual wheelchair. A list of the available options and accessories can be viewed in the order form of your wheelchair.

Inform yourself regularly about product safety and possible recalls of our products in the < *Information center* > on our website:
< *www.meyra.com* >.

We have developed a product that fulfils the technical and legal requirements of medical devices. For information about a severe accident that can still not be ruled out completely, please use our E-mail address < *info@meyra.de* > and inform the responsible governmental agency of your country.

LIST OF MODELS

This operating manual applies to the following models:

Model 1.185 (slanted front section)
Model 1.186 (straight front section)

INDICATIONS / CONTRAINDICATIONS

In case of allergic reactions, skin rashes and/or pressure sores during the use of the wheelchair sores contact a doctor immediately.

In order to prevent contact allergies, we recommend to use the wheelchair only when wearing clothes.

The wheelchair serves as support in case of extremely pronounced walking disability resp. inability to walk, e.g. caused by:

- paralysis,
- defects or deformations of limbs,
- loss of limbs,
- damages or contractures in joints,
- other diseases (severe to fully pronounced impairments in mobility/ walking in cases of structural an/ or functional damages of the lower extremities, u. o. amputations, results of injuries, musculoskeletal/neuromusculoskeletal caused movement disorders).

The wheelchair may not be used with a disability to sit.

The wheelchair may not be used without an accompanying person, in cases of:

- uncontrolled balance disorders,
- cognition disorders,
- loss of extremities on both arms,
- contractures / damages of the joints on both arms,
- insufficient or no eyesight.

➔ Please ask your doctor, therapist or specialist dealer to these and possible other risks in combination with this product.

ACCEPTANCE

All products are checked for faults in the factory and packed in special boxes.

➔ However, we request that you check the wheelchair for possible transport damage immediately on receipt – preferably in the presence of the carrier.

➔ The packaging of the wheelchair should be stored for a further transport that might become necessary.

INTENDED PURPOSE

The wheelchair serves independent movement of an adolescent or grown person taller than 1.5 m or transport through an accompanying person.

USE

Do not reach into the spokes or grip the tyres of the rotating wheels. – Danger of injury!

Do not reach into the space between the pressure brake and the tyre when propelling the wheelchair. – Danger of injury!

Avoid a jerky propulsion of your wheelchair. – Danger of tipping over or tilting!

Do not use the wheelchair without leg support and arm support!

The wheelchair is applicable on level, firm surfaces and can be used as follows:

- for indoors (e.g. apartment, day care),
- outdoors (e.g. paved paths in parks),
- as a companion on tours (e.g. in a bus or train),

  ➔ In specific dimensions (overall height, overall width, overall length, turning radius) your wheelchair is not suited for transport within a train.

  ➔ Get information on possible limitations before the transport.

- transport within an airplane should only be done with PU-tyres.

  ➔ Ask the airline for possible limitations before transport in an airplane.

- Never expose the wheelchair to extreme temperatures and damaging environmental conditions, such as sunlight, extreme cold or salty water.
- Sand and other dirt particles can seize on moving parts and render them without function.
- Use only the handrims on the drive wheels to propel your wheelchair.

You must not let yourself be carried in your wheelchair by having the wheelchair lifted from the floor. Parts that are not securely fixed, e.g. height adjustable push handles or clothes guard, can come away and thus cause an accident.

Only apply the wheelchair within the scope of the specifications and limitation described in chapter *Technical data* on page 49.

WHEELCHAIR FOLDING/ UNFOLDING/CARRYING

You wheelchair can be folded without the aid of tools.

➔ Check the locking points!

1. Remove the seat cushion, if applicable.
2. Remove the leg supports/the footplate or fold both footplates up.
3. Pull the seat belt upward in the centre of the front and back.

   ➔ When using auxiliary drives (wheel hub drives) tilt the wheelchair over one side while folding.

4. If necessary remove the connection rod of the double handrim drive or the push bar.

Your wheelchair can be carried without difficulty when folded.

For this, push one lower arm from the front under the upward folded seat belt. Place other hand underneath the rear seat fold for support.

Lift the wheelchair to horizontal position.

Tip the wheelchair slightly to one side in order to make the unfolding easier. At the side resting on the floor, press the seat tube down to the end stop.

➔ You may need to press down both seat tubes with the hands in order to do this.

➔ Ensure that the seat tube sits securely on the support surface.

ADJUSTMENT

Always have adaptation, adjustment or repair work carried out by a specialist dealer.

The wheelchair offers manifold adjustment possibilities to individual vital statistics. Before first use an adaptation of the wheelchair and a practical instruction in the functionalities of your wheelchair should be carried out by your specialist dealer. The adaptation will take into account the driving experience, the physical limits of the user and the main place of use of the wheelchair. Before first use, check the functionality of your wheelchair.

➔ We recommend a regular control if the wheelchair adjustment in order to ensure a long-term optimal provision even with changing illness/handicap patterns of the user. Especially for juveniles an adjustment every 6 months is recommendable.

COMBINATION WITH MANUFACTURER FOREIGN PRODUCTS

Any combination of your wheelchair with components not supplied by us generally results in an amendment to your wheelchair. Please inquire with us if there is a valid combination clearance/release.

Auxiliary drives

Mounting of additional- and front attachment drives constitute an extreme amendment of the wheelchair. The amendment will result in a forfeiture of the declaration of conformity for the wheelchair.

- The verification of conformity in combination with the valid medical device directive / medical device ordinance lies in the responsibility of the supplier of the additional or header drive. He is also responsible for the product included documentation of the medical product combination.

REINSTALLMENT

The wheelchair is suited for reinstallment. With the building block system the wheelchair can be fit to accommodate different handicaps body sizes. Before reimplementation the wheelchair is to undergo a complete inspection.

- Hygienical measures required for reinstallment are to be carried out according to a validated hygienic plan and must include disinfection.

The service manual, intended for the specialist dealer provides information to the reinstallment and reinstallment frequency of your wheelchair.

LIFE SPAN

We expect an average life span of about 4 years for this wheelchair, as far as the wheelchair is applied for its designated purpose and all maintenance and service guidelines. The life span of your wheelchair depends upon the frequency of use, the application environment and care. The implementation of spare parts can prolong the life span of the wheelchair. As a rule spare parts are available up to 5 years after production is discontinued.

- The indicated lifespan does not constitute additional guarantee.

OVERVIEW

Model 1.185

The overview shows the most important components of the wheelchair.

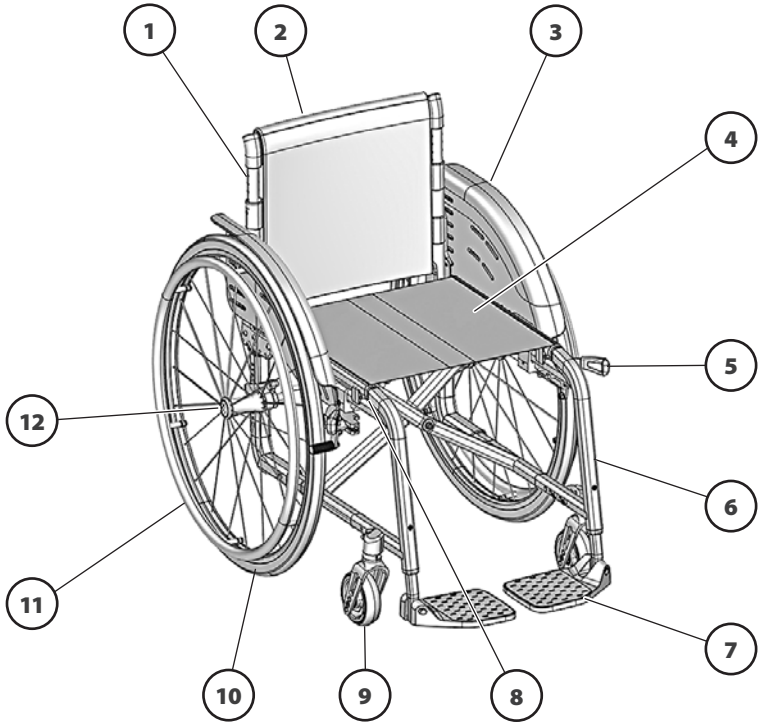

(1) Back support

(2) Back support strap / Back support upholstery

(3) Clothes guard

(4) Seat belt/seat cushion

(5) Pressure brake / Swing brakes

(6) Slanted front frame

(7) Footrest

(8) Type plate
- Bottom side of upper frame tube

(9) Steering wheel

(10) Driving wheel

(11) Handrim

(12) Locking knob – Quick release axle

OVERVIEW

Model 1.186

The overview shows the most important components of the wheelchair.

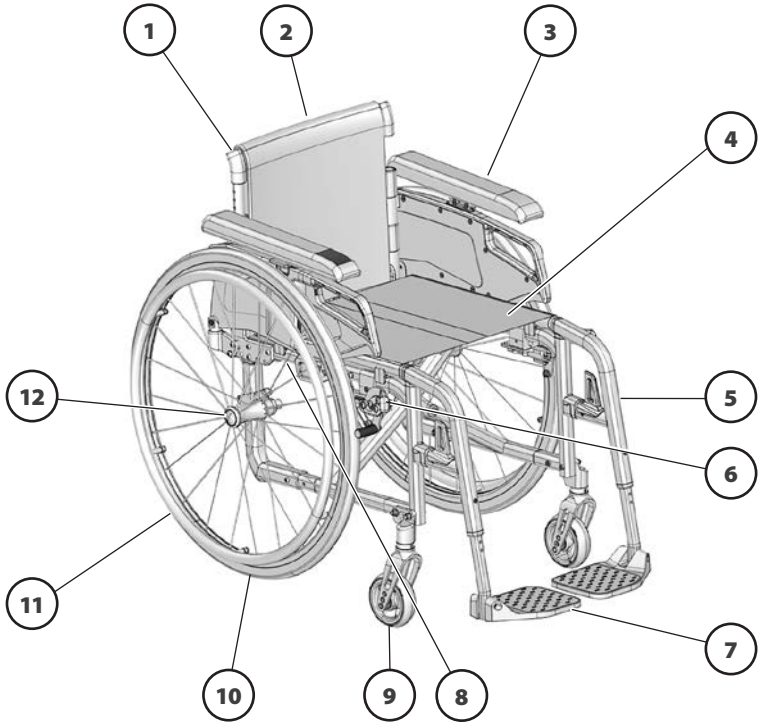

Pos. Description

(1) Back support

(2) Back support strap / Back support upholstery

(3) Arm support

(4) Seat belt/seat cushion

(5) Leg support

(6) Pressure brake / Swing brakes

(7) Footrest

(8) Type plate
- Bottom side of upper frame tube

(9) Steering wheel

(10) Driving wheel

(11) Handrim

(12) Locking knob – Quick release axle

BRAKE

Arrange an immediate repair of the brakes by your specialist workshop if the braking performance reduces.

Wheelchairs with PU-tyres when stored for longer periods of time, should be put away safely without activated pressure brakes, since otherwise permanent deformations to the tyre surface could occur.

By locking the brakes with the brake lever (1), the wheelchair is secured against rolling away unintentionally (parking brake). Depending on the version, the wheelchair can be equipped with pressure brakes [2] or with drum brakes [4].

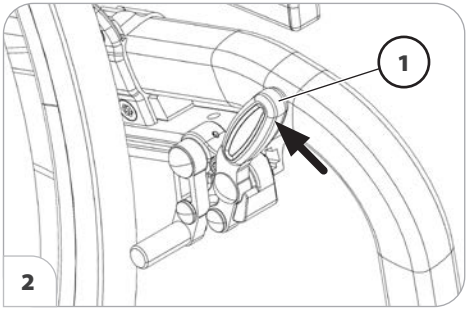

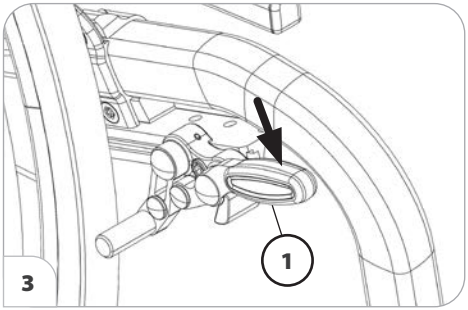



Pressure brake - user

Locking the brakes

To secure the wheelchair against any unintentional rolling, press both brake levers forward all the way [3].

- Observe jamming point between brake lever and frame tube!
- It should not be possible to push the wheelchair forward when both brakes are locked.

Releasing the brakes

Pull both brake levers back all the way [2].

Service brake

The wheelchair is braked down with help of the handrims.

- If needed use suitable gloves in order to brake down the wheelchair.

Light pressure brake, swivelling

Locking the brakes

To secure the wheelchair against any unintentional rolling, swivel both brake levers outward all the way [2].

- It should not be possible to push the wheelchair forward when both brakes are locked.

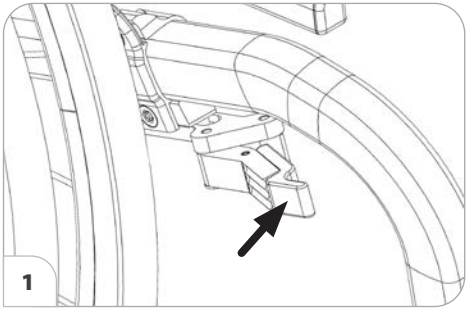

Releasing the brakes

Swivel both brake levers inward all the way [1].

- Observe jamming point between brake lever and frame tube!

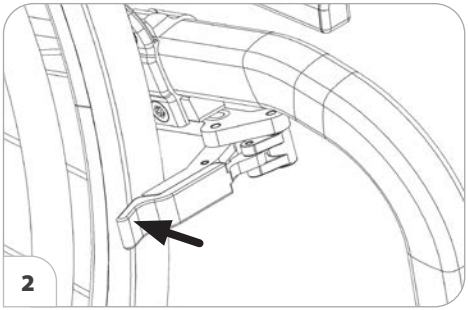

Service brake

The wheelchair is braked down with help of the handrims.

- If needed use suitable gloves in order to brake down the wheelchair.

Drum brake for accompanying persons

The drum brake is activated by the accompanying person through the brake levers [1].

Function as operating brakes

Use both brake levers evenly and only lightly in order to achieve a controlled deceleration of the wheelchair.



Locking the drum brakes

Pull both brake levers [1] and press the locking latch (2) forward.

Release the brake lever. – Depending on the adjustment the latch engages in the first (A) or second (B) locking position and activates the brake.
If the third locking position (C) is required to activate the brake, it must be readjusted by a specialist workshop.

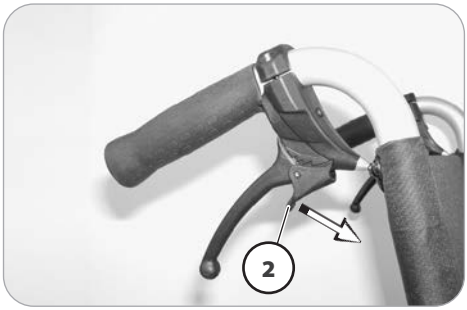

Loosen the drum brakes

Pull both brake levers (1) until the latches (2) automatically jump out of the locking points.

Let go of both brake levers. – The parking brakes are released and the wheelchair ready for use.

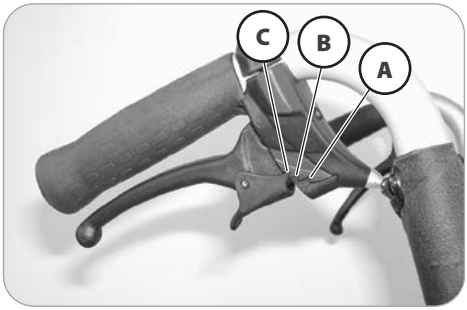

Brake lever extension

Do not use the grips of the brake lever as support.

Do not pull off the brake lever extension whilst in motion. – Accidents could result if the brake lever extension is drawn too much.

The brake lever extensions multiply the applied brake force and reduce the force you need to apply in order to lock the brakes (1).

- For transfer into/out of the wheelchair pull the brake lever extension off of the brake levers.
- Only use the wheelchair with the brake lever extensions attached.

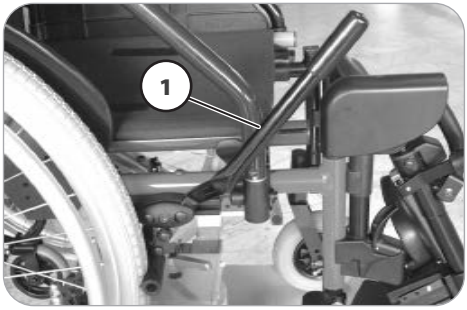

One-hand brake

The one hand brake [2] enables a locking of the brakes with only one brake lever.



Particularity of the one hand brake

The brake lever of the one hand brake can be swivelled backward after it has been pulled upward [3].



LEG SUPPORTS

Before any actions on the leg supports the wheelchair is to be secured against unintentional rolling motions.

➔ Therefore observe chapter *Brake* on page 13.

Calf belt

Do not drive without the calf belt.
– Danger of accidents.

The removable calf belt (1) prevents the feet from sliding off the back of the footboard.

Removing the calf belt

To remove the calf belt, open the velcro fastener.

Attaching the calf belt

For attachment, guide the calf belt through the attachment jig [2] and close the velcro fastener.

Length adjustment of the calf belt

For length adjustment, the calf belt is guided around the special attachment pins [2] and adjusted in length with a velcro fastener.

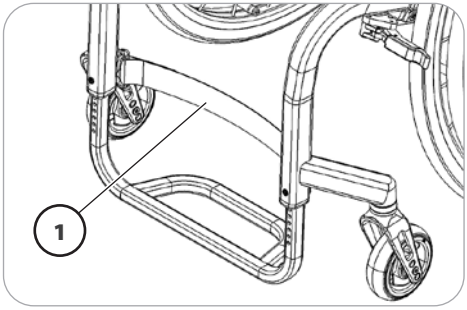

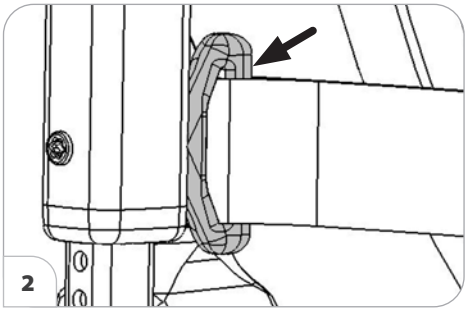

Footrest

Have the adjustments carried out in your specialist workshop.

Depending on equipment the leg supports are height, depth as well as angle adjustable and can be adjusted to the individual demands of the user.

Folding the footrest up

The footplates, resp. footboard needs to be folded up before entry or exit [1].

➔ Check the locking points!

1. Remove both feet from the footplates resp. footboard.
2. Remove lower calf belt, if present.

   ➔ Therefore observe chapter *Calf belt* on page 17.
3. Fold up the footplates resp. footboard [1].

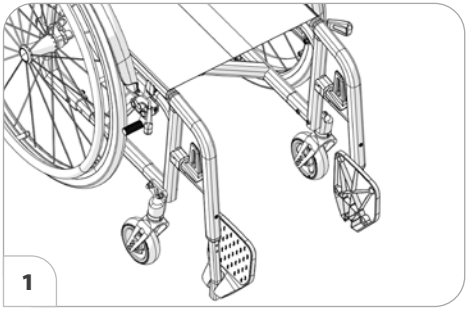

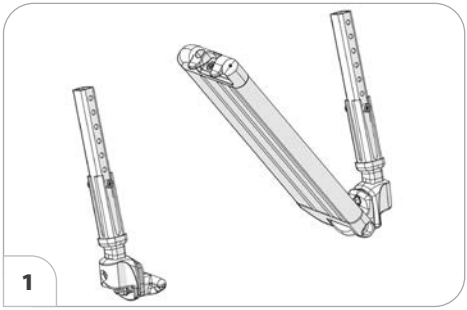

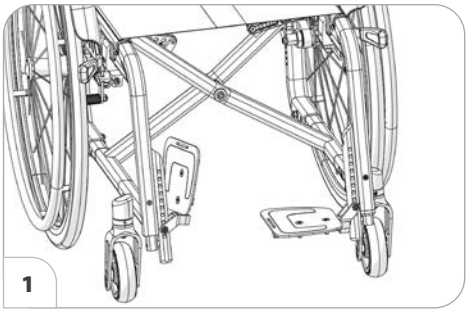

Folding the footrest down

Before starting to drive the footplates resp. footboard need to be folded back down [2] and the calf belt attached.

➔ Therefore observe chapter *Calf belt* on page 17.

Folding the footboard down

In order to fold down the footboard, lower the loose end of the footboard as far as possible down onto the footboard bracket [3].

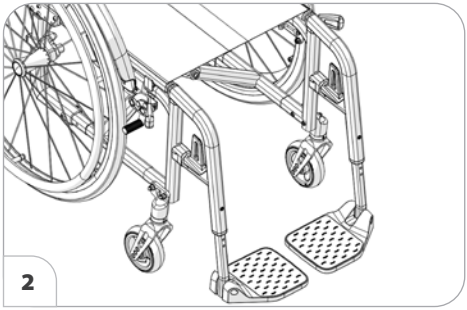

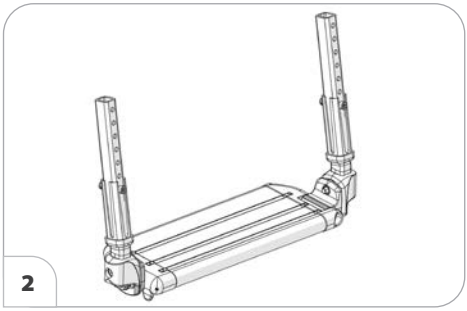

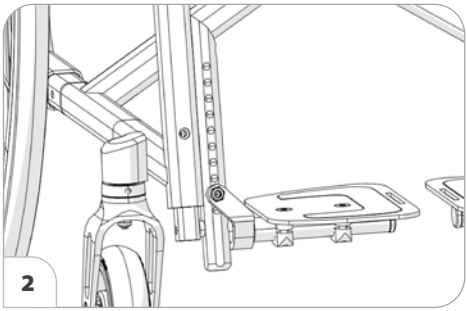

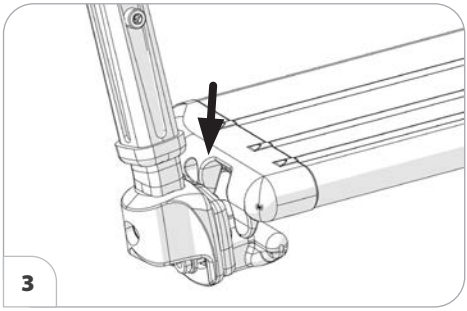

Upper leg support, model 1.186

The upper leg support with an inserted footrest is termed leg support.

Turning the leg supports to the side

Leg supports turned to the side are released automatically and can easily come off. Note this when handling (e.g. transport).

For easy transfer out of/into the wheelchair as well as driving closer to a closet, bed or bathtub the leg supports can be swivelled away toward the in-/outside [1]. Remove the calf belt, if applicable, before swivelling away the leg supports.

➔ Therefore observe chapter *Calf belt* on page 17.

Fold up the footplates resp. footboard in order to swivel away the leg supports [2].

➔ Therefore observe chapter *Folding the footrest up* on page 18.

Afterwards pull or press the respective locking lever (3) sideways or forward and swivel the corresponding leg support inward/outward [1].

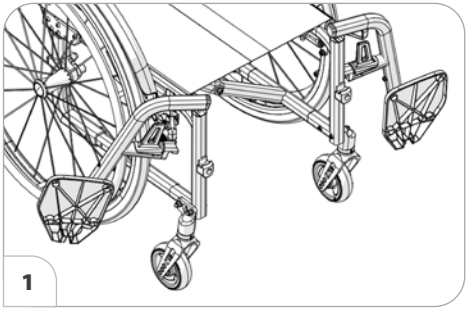

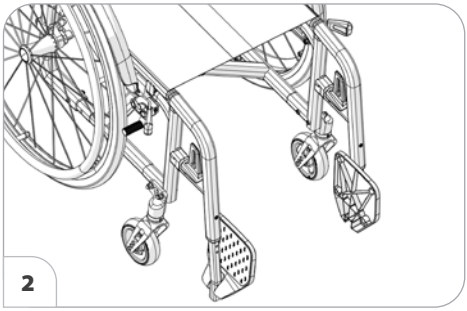

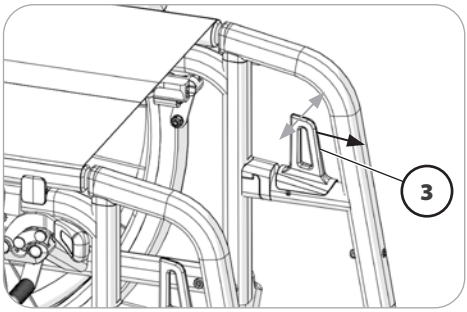

Swivelling in the leg supports

For inward swivelling, let the leg supports swivel forward until the lock audibly engages [1].

- After audibly swivelling the leg supports inward check the respective locking device.
- Afterwards fold the footplates / the footboard down [2] and observe chapter *Footrest* on page 18 .

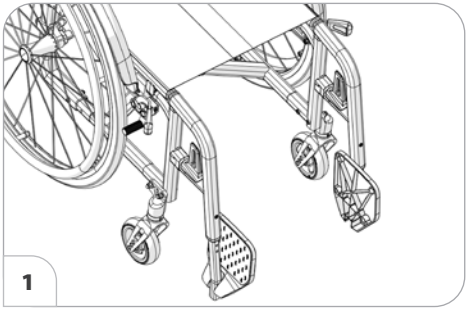

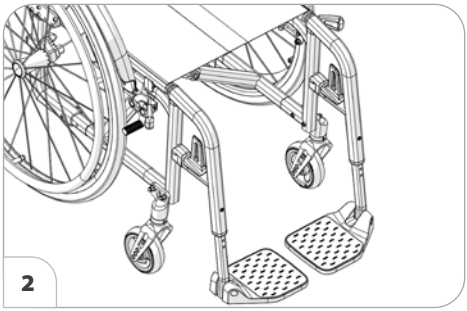

Removing the leg supports

With removed leg supports there is an increased danger of tilting backwards.

For easy transfer into and out of the wheelchair as well as a reduced wheelchair length (important for transport) the leg supports can be removed [1].

Remove the calf belt before swivelling away the leg supports.

➔ Therefore observe chapter *Calf belt* on page 17.

For removal first swivel the leg support sideways [2] and then remove them toward the top [1].

➔ Therefore observe chapter *Turning the leg supports to the side* on page 20.

➔ Watch for possible danger of jamming!

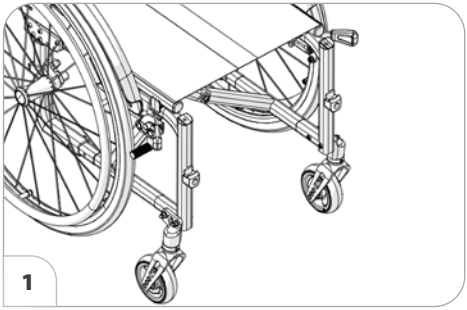

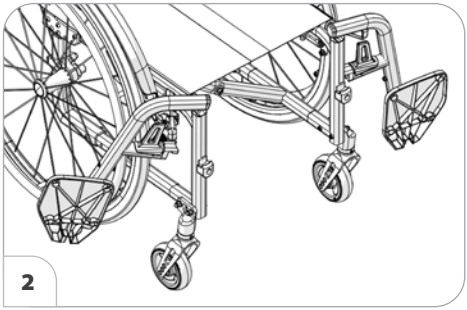

Attaching the leg supports

For inserting press the leg supports, swivelled to the side, parallel to the front frame tube and lower it into place [3]. – In doing so the holding pin must slide into the frame tube.

After attachment swivel the leg supports inward [4].

➔ Therefore observe chapter *Swivelling in the leg supports* on page 21.

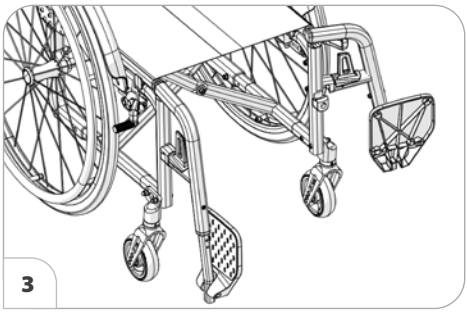

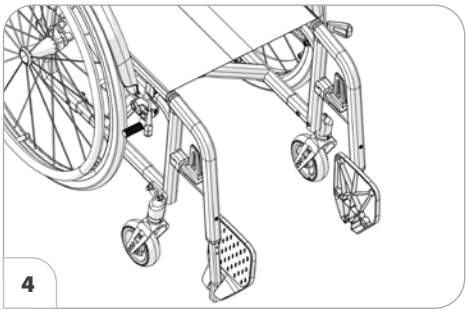

Mechanically height-adjustable leg supports

Never put the free hand into the adjustment mechanism. Have the leg support secured by an accompanying person against unintentionally falling down.

Do not let the leg support drop on its own weight. – Danger of injury!

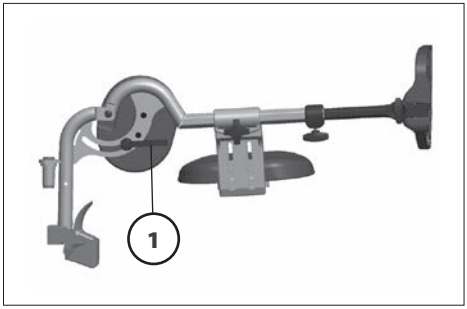

Lifting/lowering the leg support

Before lifting/lowering relieve the leg support by an accompanying person by slightly lifting it up.

Afterwards loosen the clamping lever (1) and have the leg support lifted/lowered slowly to the desired level by an accompanying person.

After the adjustment retighten the clamping lever (1).

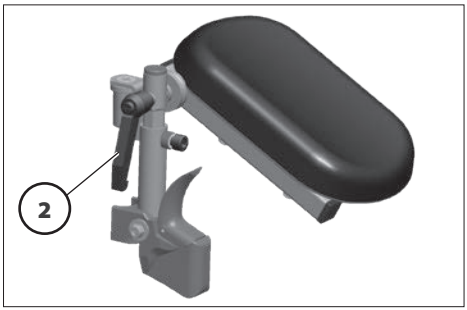

Lifting/lowering the amputee leg support

Before lifting/lowering relieve the amputee leg support by an accompanying person by slightly lifting it up.

Afterwards loosen the clamping lever (2) and have the amputee leg support lifted/lowered slowly to the desired level by an accompanying person.

After the adjustment retighten the clamping lever (2).

➔ In doing so ensure that the toothing of the angle adjustment grips into place.

ARM SUPPORTS

Do not use the arm supports to lift or carry the wheelchair.

Do not drive without the arm supports.

No not grab between the frame and arm support. – Danger of squashing!

When the wheelchair is being pushed by an attendant the user is to place his hands onto the arm cushions or in his lap and not at the sides between body and arm support. – Danger of squashing the fingers!

During lateral transfer without arm support, there is a danger of unintentionally releasing the brake and soiling the clothes on the drive wheel.

The arm supports [1] can (depending on the model and version) be removed, are height adjustable and at the same time serve as a padded arm support, clothes guard and wind breaker.

Removing the arm support (Model 1.186)

To remove the arm supports, activate the locking device (3) and swivel the arm support upward [2].

Afterwards remove the arm support toward the top.

Inserting the arm support (Model 1.186)

First insert the arm support beside the seat surface from the top into the guide [2].

Then swivel the arm support down forward until the locking device audibly engages [1].

➔ Check the locking points!







Swivelling up the arm support (Model 1.186)

For transfer out of/into the wheelchair the arm support can be swivelled upward [2] as well as folded behind the back support [3].

Release the locking device (4) first before swivelling up the arm support.

Afterwards swivel the arm support upward [2] and if needed fold it behind the back support [3].

- On the version with drum brakes or low back support height the arm support cannot be folded behind the back support.

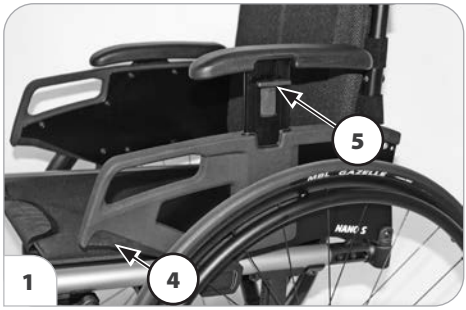



Height adjustment of the arm support (Model 1.186)

The upholstered arm support pads can be height adjusted in 5 steps [1].

For lifting or lowering the padded arm support, pull or press the lever (5) with your fingers and at the same time slide the padded arm support to the desired height.

Afterwards slide the padded arm support again until it audibly locks into place.

- Check the locking device by trying to pull or push the padded arm support.



Sidebar
(Model 1.186)

Do not use the sidebar [1] to lift or carry the wheelchair.

Only use the sidebar [1] as a padded arm support and not as a lifting or rising aid.
– An increasing tension factor of the rear tube arch, due to the strain on the front part of the sidebar, leads to material fatigue.

Do not drive with the sidebar swivelled to the rear. – Danger of accidents due to an increased turning radius!

Do not insert fingers or objects into the bracket (4) without sidebar. – Danger of jamming the fingers!
– Danger of accidents through sticks or rods dragging over the ground!

No not grab between the frame and clothes guard. – Danger of squashing!

When being pushed in the wheelchair by the accompanying person the user has to keep his hands on the arm supports or in his lap and not at the sides between body and arm support.
– Danger of squashing the fingers!

The sidebar [1] is removable and can be swivelled toward the rear [2].

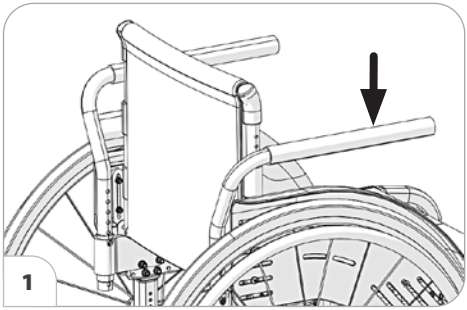

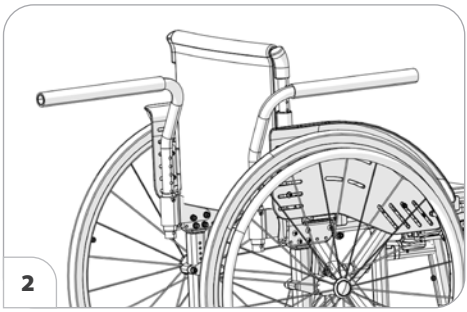

Removing the sidebar

To remove the sidebar (3), pull it out toward the top.

Attaching the sidebar

To attach the sidebar (3) slide it from the top into the bracket (4) [6].

➔ Ensure that the stopper screw for locking the sidebar is located inside the receptacle (5).
  - Check the locking function!

Swivelling the sidebar toward the rear

For swivelling to the rear [6], first lift the sidebar (3) out of the locking groove (5). Afterwards swivel the sidebar (3) toward the rear until it engages into the locking device [6].

➔ Ensure that the stopper screw for locking the sidebar (3), is located in the locking groove of the receptacle (4) (5).
  - Check the locking function!

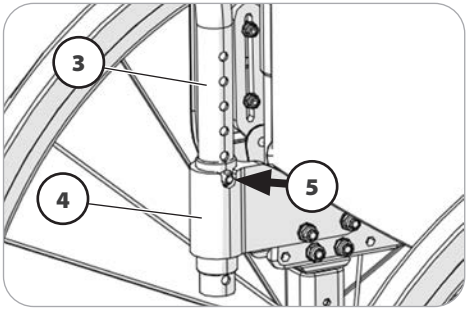

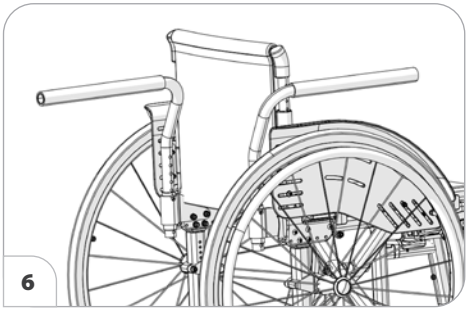

CLOTHES GUARD

Do not use the clothes guard (1) to lift or carry the wheelchair.

No not grab between the frame and clothes guard. – Danger of squashing!

Do not drive without the clothes guard!

When being pushed in the wheelchair by the accompanying person the user has to keep his hands on the arm supports or in his lap and not at the sides between body and arm support. – Danger of squashing the fingers!

The clothes guard (1) serves as a wheels and wind protector.

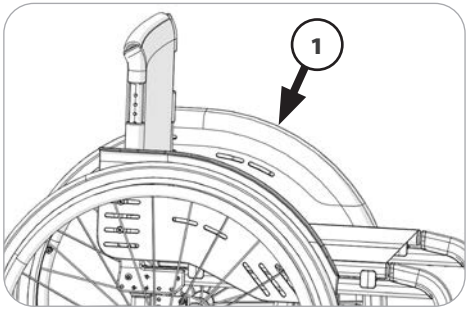

BACK SUPPORT

Folding over the back support

The back support [1] can be folded down for storage or transport [2].

Then unlock the back support by pulling or pressing the rope (3) and fold it onto the seat [2] until the pressure bolt of the rope audibly locks into place.

- Check the engagement of the back support with a quick jerk.

Folding up the back support

First pull or press the rope (3) in the middle in order to raise the back support. Then pull the back support up as far as possible [1]. – The pressure bolt must audibly lock into place.

- Check the engagement of the back support with a quick jerk.
- The greasing of the thrust bolts is recommended for an easier latching of the backrest.

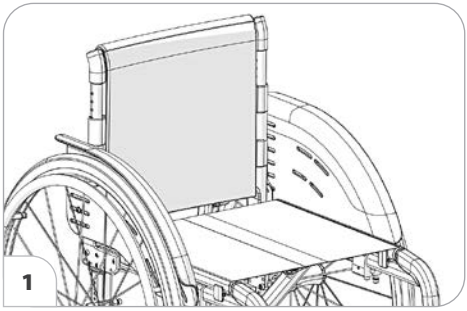

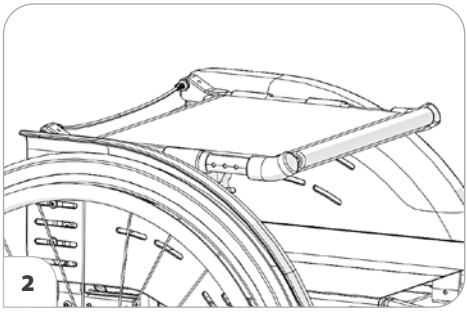

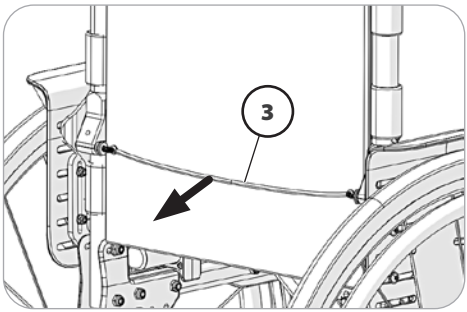

Back support belt

Fitting the back belt

The overlapping of the Velcro fastener has to be at least 10 cm!

The tension of the back support is adjustable.

1. Pull off the flap of the back support and fold it to the front [4].
2. Open the Velcro fastener of the belt that you wish to adjust and close it again after adjustment.
3. Pull the back belt to the back again and attach the velcro strap [5].

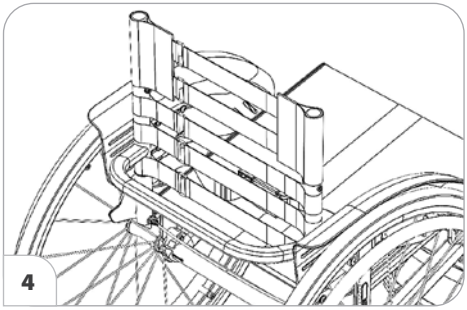

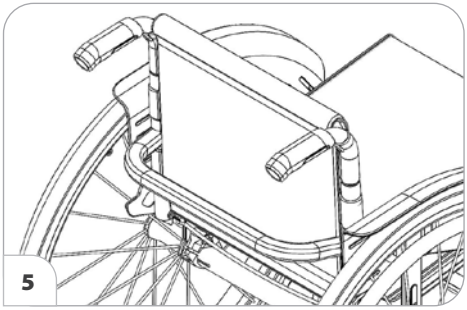

Removing the back support upholstery

For removal, first pull off the rear part of the back support upholstery (1), then fold it over to the front and pull it off of the adjustable back strap (3).

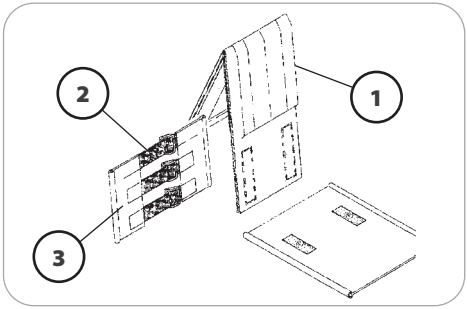

Placing the back support upholstery

For placing the back support upholstery (1), lay it centred around the upper velcro straps (2) and attach it to the adjustable back strap with the velcro fasteners (3).

- For a soft upper edge you should leave a little space between the upper spanning belt (2) and the folded back support upholstery (1).
- When the user leans against the back support upholstery (1) again, pay attention that:
- The pressure of the back must be spread evenly throughout the back support upholstery.
- A complete hand should fit in between the cushion and back at the upper edge of the back support upholstery.
- The head of the user must be held in balance through the adjustment of the spanning straps.

PUSH HANDLES

Do not use the height adjustable push handles [1] to lift or carry the wheelchair.

The height adjustable push handles [1] are about 150 mm continuously height adjustable and secured against being pulled out.

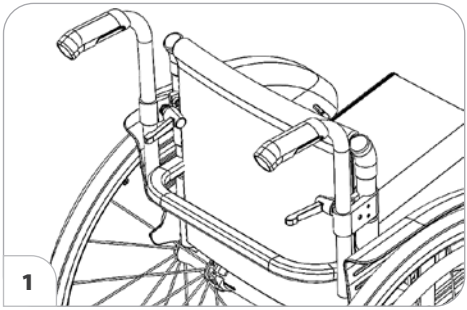

Push handles with clamping device

- In doing so, hold onto the push handle that is to be adjusted with one hand.
- After each adjustment the clamping lever is to be tightened sufficiently, so that the push handle cannot be turned anymore.

Height adjustment

Loosen the clamping screw with the clamping levers (2) so far that the respective push handle can be adjusted into the desired position.

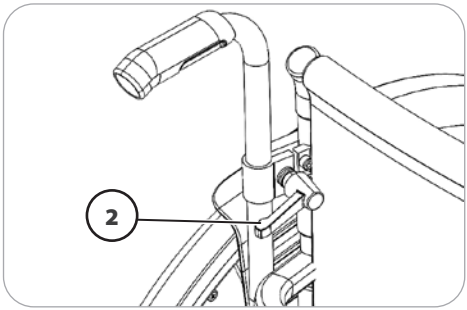

Angle adjustment

To change the position of the push handles, loosen the clamping screw through the clamping lever (2) and turn the push handles into the desired position.

Extracting/inserting

1. To pull out, resp. insert the push handles, press the respective spring button on the lower end of the push handle tube.
2. Afterwards retighten the clamping screw with the clamping levers (2).

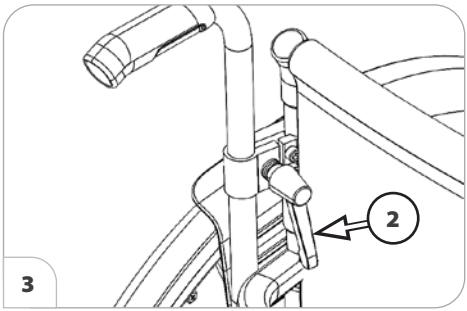

Special features of the clamping lever

The clamping lever (2) can be turned into an operation position that is comfortable for you.

For this pull the clamping lever (2) outward (direction of the arrow), until the teething is released.

After turning the clamping lever (2) let the teething snap back into place [3].

Swivel away push handles

Do not use the height adjustable push handles [1] to lift or carry the wheelchair.

Check the firm seat of the push handles after each adjustment! – Loss of control through unintentional steering motions of the wheelchair.

The push handles (1) can be swivelled down with one hand [2].

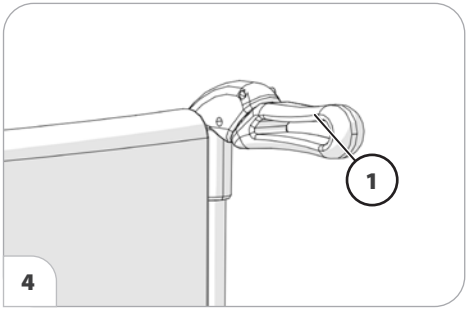

Swivelling away the push handles

Swivel the push handles (1) down in a circular motion [2].

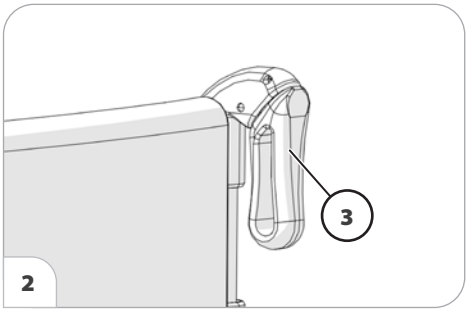

Swivelling up the push handles

Swivel the push handles (3) up in a circular motion [4].

WHEELS

Tyres are made of a rubber mixture and can leave permanent or difficult-to-remove marks on some surfaces (e.g. plastic, wooden or parquet flooring, carpets, mats).

Drive wheels

Do not use the wheelchair without mounted drive wheels [1].

After attaching the drive wheel, check the locking device by trying to pull it off.

The drive wheels are supported on a quick release axle and can be removed resp. attached without tools.

Therefore first press the locking button of the quick release axle underneath the cover cap (2).

Afterwards remove or attach the drive wheel

- The air pressure value for the tyres of the wheelchair can be read in the chapter *Technical data* on page 49 or details on both sides of the tyre cover.
- A drive wheel with too much lateral lag or not engaged quick release axle, is to be repaired by a specialist dealer immediately.
- No person may be seated in the wheelchair during assembly or removal. The wheelchair should stand on a level and firm surface. Before starting the disassembly work, support the frame to prevent the wheelchair from tipping over and secure it to prevent an unwanted movement or tipping over.

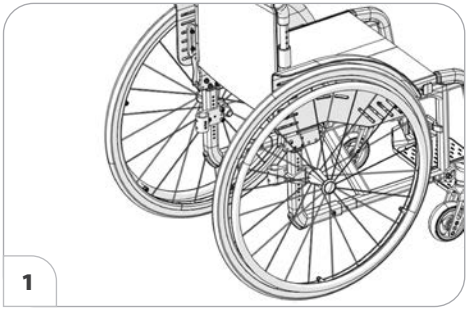

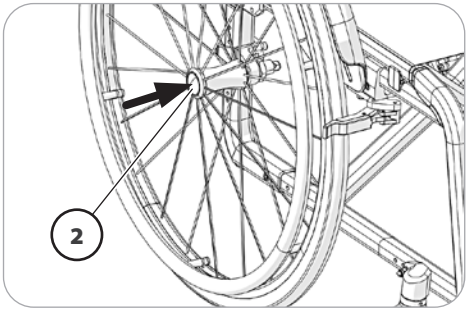

Tyre damage on pneumatic tyres

In order to repair a damaged tyre use a foam cartridge that you get at the specialist dealer.

- Afterwards immediately go to a specialist workshop for repairs!

Hand and spoke guard

The hand and spoke guard [1] prevents injuries to the hands occurring by jamming in the turning spokes of the wheels, as well as damage to the spokes.

The spoke guard is attached to the spokes with three clips (2).

- Switch or replacement of the spoke guard is to be carried out by a specialist dealer.

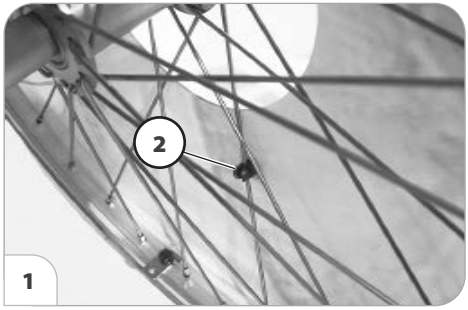

1

Handrim

Weather related danger of slipping of the hands on the damp, smooth handrims.

- If needed apply optional handrim cover.

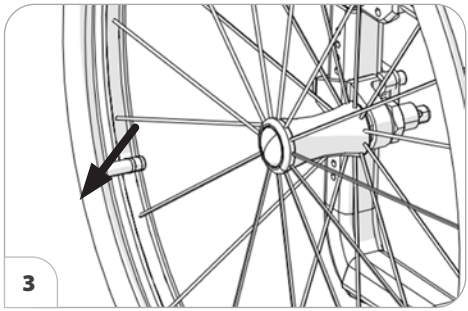
3

Handrim distance

The defined handrim distance [3] can be selected from 15mm or 25 mm.

- Switch or replacement of the handrim is to be carried out by a specialist dealer.

Specialities for double handrims

Before each ride ensure the secure fit of the connection rod (2).

The wheelchair can be propelled with on hand with the double handrim [1].

Propelling the wheelchair

Both handrims are to be operated simultaneously to drive straight forward.
A curve can be driven by operating only one handrim.

Folding/unfolding with double handrims

The telescopic connector tube (2) is to be removed before beginning the folding procedure.

In order to remove the connection tube (2) the clamping screw is to be loosened through the handwheel (3).

After unfolding the wheelchair the telescopic connection tube (2) is to be replaced and the clamping screw retightened with the handwheel (3).



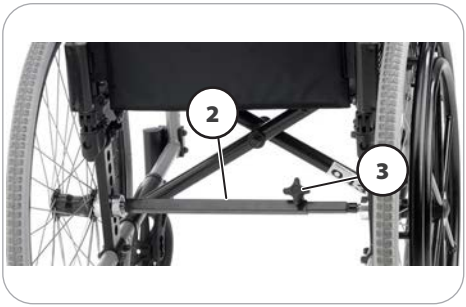

SUPPORT CASTORS

Support castors do not provide sufficient protection against tipping over in certain situations.

Definitely refrain from the following:

- Leaning the upper body far back.
- Jerky acceleration, especially when driving uphill.

In order to raise the tilting stability never drive without the support castor swivelled to the back.

A bent tube on each side serves to increase the tilting stability.

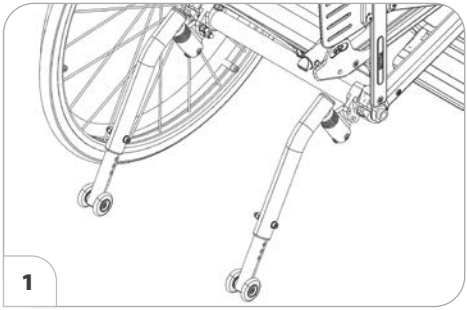

1

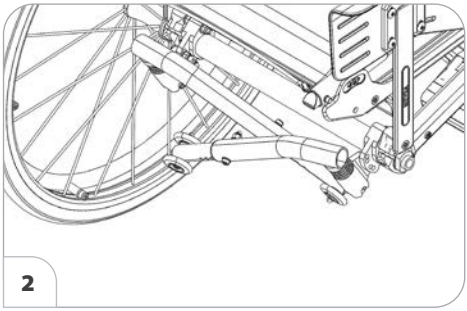

2

Swivel away support castors

The support castors [1] can be swivelled inward underneath the seat [2].

➔ Swivelling of the support castors can be done by an accompanying person or aid.

Swinging the support castors

Press the support castors down out of the lock then swivel them under the seat [2], or toward the back [1] until the respective lock engages automatically.

➔ In case of two existing support castors, the left on needs to be swivelled inward first and the right one swivelled toward the back first.

RETAINING STRAP

Make sure that no objects are trapped between belt and the body!
The retaining strap is not part of the retaining system for the wheelchair and/or the driver during transport in motor vehicles.

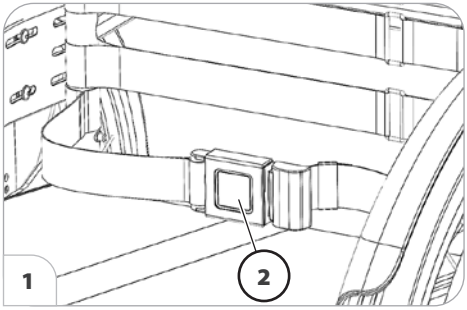

The two loops of the retaining strap are slid over the respective back frame tube [1].

The retaining strap serves to stabilise the sitting position and prevents tilting forward out of the wheelchair, especially during abrupt stopping of the wheelchair.

To fasten the retaining strap, pull both ends forward and audibly let the buckle click into place. To open the retaining strap, press down the release button (2) and pull the two ends of the strap apart.

- The retaining straps can be adjusted in length and should not be pulled too tight.

THERAPY TABLE

Danger of jamming when sliding on the therapy table!

Sharp objects (e.g. watches, rings, knives or belt buckles) as well as coarse dust can cause unattractive brush marks in the surface of the therapy table.

Do not place any hot objects onto the therapy table.

Do not drive with the therapy table attached when there are loose objects or containers with fluids on it.

Do not use aggressive or granular cleaning agents to clean the therapy table.

Do not use the therapy table as handle for carrying the wheelchair.

The therapy table is pushed from the front over the arm support cushions [1].

➔ Ensure that the therapy plate sits securely on the arm supports pads.



BASIC SAFETY INFORMATION

This safety information is an extract of the *Safety and general handling instructions*, that can be found on our website: < *www.meyra.com* >.

Do not insert fingers into open profiles/tubes (for example after removing the drive wheels). – Danger of injury!

Scuttling (rolling motion of the wheelchair with help of the feet) is only permitted with creeping rolling speed on horizontal, level surfaces indoors.

When scutteling watch for the possibility of jamming the feet.

- In doing so the sitting position may not be slid onto the front third of the seat.

A stable sitting position is to kept while using the wheelchair, even when not in motion and especially on hills and slopes. – Danger of accidents!

In a safe sitting position the back of the user lies directly on the back support upholstery and the hip of the user is at the back end of the seat.

Transit out of the wheelchair on hills/slopes may only be carried out in emergencies and with the aid of an accompanying person and/or helper! – Danger of accidents!

Increased danger of tipping over when using the angle adjustable back support.

You should not smoke while using the wheelchair.

Exposure to direct sunlight can cause seat covers/upholstery, arm support pads, leg supports and handles to heat up to over 41 °C. – Contact with exposed skin can result in injury! Prevent such heating by parking the wheelchair in a shaded area.

Special attachment points for fastening objects that are to be carried along are not provided.

Accompanying person

The accompanying person must be made aware of all possible danger situation before the start of his/her supportive involvement. The parts of your wheelchair that are held onto by the accompanying person are to be checked for tight fit.

Transfer out of the wheelchair

Drive with the wheelchair as closely as possible to the spot where you want to switch out of the wheelchair.

- For this observe chapter *Brake* on page 13.
- We recommend to conduct the transfer from the wheelchair together with an aid.

Reaching for objects

Avoid an extreme forward or backward inclination of the upper body when picking up or placing heavy objects. – Danger of wheelchair tipping over, especially in the case of narrow seat widths and high seat heights (seat cushion)!

Driving on falling, rising or transverse gradients

For safety reasons, the maximum permitted gradient is limited because the tip-over stability and the braking and steering behaviour are impaired by a reduced floor/road.

➔ Observe chapter *Technical data* on page 49.

For your own safety, we recommend that you use the assistance of an accompanying person for driving slopes of more than 1% tilt.

➔ This low gradient value is valid for persons that are not able to effect even the smallest centre of gravity change by changing the position of their upper body.

The accompanying person should be aware that the control of the wheelchair requires more strength on a downward slope/ hills than on a level driving surface and that there is an increased danger of slipping.

Never lean towards the downhill direction when driving on rising, falling or transverse gradients.

Avoid jerky changes of the driving condition (especially with critically adjusted driving parameters as for example an active wheel position).

Never drive faster than walking speed.

There is an increased danger of tilting while driving backwards.

While driving in curves and when turning on inclinations and slopes there is a danger of tilting.

The braking force transferred to the driving surface is much less on a downward slope than on a level driving surface and is further reduced by poor road conditions (e.g. rain, snow, grit, dirt). A dangerous slipping of the wheels due to excessive braking and an associated unwanted course deviation must be avoided by way of a careful dosed braking.

At the end of the downward slope, take care that the footboard does not make contact with the ground and endanger you through a sudden braking effect.

Transverse surfaces to the driving direction (e.g. transversely sloped pavements) effect a turning of your wheelchair in the downhill direction. You or an accompanying person must compensate for this drift by a counter-steering.

Crossing obstacles

When driving over an obstacle the support castors are to be swivelled away or removed. – The support castors could make contact with the ground when driving over an obstacle and render the wheelchair without manoeuvrability.

After having overcome obstacles, support castors that were previously removed need to be mounted again resp. support castors that were swivelled to the side, swivelled back into place.

Each crossing of obstacles involves a risk! Even flat obstacles (e.g. sills, carpet edges, small steps or similar) represent a danger of tipping.

The crossing of obstacles is a special danger situation in which a combination of the safety advice in the sections headed uphill driving, downhill driving and driving transverse to a slope must be observed in addition to other safety advice.

For your own safety all obstacles should only be driven over with an accompanying person. The pedal tube is to be used as support for each manual tilting of the wheelchair.

Only with sufficient and safe control of the wheelchair, is an independent, danger free passage over small obstacles (< 4 cm) possible, also when using permitted auxiliary drives.

Always approach small obstacles, e.g. steps or curbs, slowly and at a right angle (90°) until the steering wheels almost touch the obstacle. Briefly stop the wheelchair and then drive over the obstacle.

Always drive over an obstacle forwards (not backwards) and simultaneously with both front/rear wheels in order to prevent a sideways tipping of the wheelchair.

Always maintain a safety distance between the wheelchair and drops, stairs and similar obstacles sufficient for reaction, braking and turning.

If possible, let one or more helpers lift you out of the wheelchair and carry you to the destination point.

The crossing of stairs is only possible with the assistance of two helpers who are familiar with the danger situation and firmly guide the wheelchair.

➔ The helpers may only hold the horizontal push bar and side frame without lifting the wheelchair.

Existing support castors are to be removed, since they might pose a danger to the aid under certain circumstances.

Loading the wheelchair

Do not use the clothes guard, footboard or accessory parts in order to lift the wheelchair!

Before lifting, the wheelchair is to be secured against unintentional rolling motions!

➔ Therefore observe chapter *Brake* on page 13.

The parts detached for loading must be carefully stowed and carefully attached again before the next journey.

The weight of the wheelchair is reduced when you remove detachable components.

The wheelchair can be also loaded with the aid of ramps or lifting platforms.

➔ Therefore observe the respective user manual and the load capacity of the ramp resp. lifting platform.

Transport in vehicles

The parts detached for the transport must be carefully stowed and carefully attached again before the next journey.

No special carrying points are allocated for carrying detachable components.

The following procedures may be necessary due to lack of space for the transport in vehicles:

- Folding over the back support.
- Remove clothing guards.
- Detach the drive wheels.

Transport safety of the empty wheelchair

All regulations and directions of the respective transport company are to be observed. – Ask for these before the transport.

The wheelchair is to the stored and secured in such a fashion that it does not present any danger to you or others.

Transport of people inside a motor vehicle

To determine if your wheelchair is approved as a seat for person transport inside a motor vehicle, please look at the type plate of your wheelchair.

- Therefore view chapter *Meaning of the symbols on the type plate* on page 57.
- Wheelchairs that are not suited for use as a seat for transport in a motor vehicle are marked with an additional label. – For this observe chapter *Meaning of the labels on the wheelchair* on page 56.
- Observe the guideline < *Safety with Meyra-wheelchairs, also during transport in motor vehicles* >! – This document and further information are available in the < *Information center* > on our website < *www.meyra.com* >.
- Anchoring systems released for transport of people are to be viewed in chapter *Applied norms* on page 50.

Transport in public methods of transportation

Your wheelchair is not designed for user transport in public transportation vehicles. Limitations may occur. We recommend use of one of the firmly built in seats of the public vehicle.

Should it nevertheless become necessary to carry out the transport while sitting in the wheelchair, the following needs to be observed:

- Use the space designated by the public transportation services for parking.
- Observe the regulations of the transport company before parking the wheelchair.
- Park your wheelchair opposite to the driving direction in the reserved space.
- The wheelchair is to be placed so that the back support it will be supported by the border of the parking space.
- One side of the wheelchair must also lie against the border of the parking space, so that the wheelchair cannot slide away in case of an accident or sudden braking manoeuvre.
- Additionally activate the parking brakes.

Driving on public highways

Observe the valid regulations for public traffic of your country and if necessary ask your specialist dealer for required accessories.

Your wheelchair can optionally be fit with lighting equipment. The lighting equipment consists of:

- Reflectors on the back support
- Reflectors on the drive wheels.

With limited visibility and especially in the dark we recommend to mount active lighting equipment and to turn it on in order to see better and be seen.

- When participating in public traffic the user is responsible or the functional- and operationally safe condition of the wheelchair.
- The valid traffic regulations must be observed and abided when participating in public traffic.
- Wear light-coloured and conspicuous clothing when driving in darkness.
- When driving in the dark avoid using the road or bicycle lanes.
- Observe that the lighting equipment is not covered by clothes or any other objects attached to the wheelchair.
- In case of physical handicaps, such as blindness the use of the wheelchair is only permitted with an accompanying person.

CLEANING

The plastic panelling is attacked through non-ionic tensides as well as solvents and especially alcohol.

Carbon parts may not the cleaned with solvents, cleaning agents containing solvents, alcohol or acetone.

The cushions and covers are normally fit with care instructions (instruction for care).

- For this observe chapter *Meaning of the symbols on the washing instruction* on page 55.

In all other cases the following information is true:

- Clean the cushion with a suitable cloth, soaked in warm water and using a pH-neutral handsoap.
- Remove spots with a sponge or a soft brush.
- Do not soak! Do not machine wash!

Follow-up with clean water and allow to dry.

The chassis, the optional lighting equipment and wheels can be cleaned damp with a pH-neutral detergent. Afterwards dry off well.

- Check the chassis for corrosion damages as well as other damages.
- Only clean the plastic parts with warm water and neutral detergent or soft soap.

Further information to cleaning can be found in the < *Information center* > on our website:
< *www.meyra.com* >.

Finish

The high quality finish ensures an optimum of protection against corrosion.

- Should the coating be damaged with scratches or similar, these areas can be touched up with our paint pen available at the specialist dealer.

Slight lubrication of moving parts will ensure for their long functioning.

Disinfection

Carbon parts may not be disinfected with solvents, disinfectants that contain solvents, alcohol or acetone.

If the product is used by more than one person (for example in a care centre), the use of a commercial disinfectant is mandatory.

- Before disinfection the upholstery and handles are to be cleaned.
- A spray- or wiping disinfection is permitted with tested and accredited disinfectants.
- Damaged upholstery parts may, under certain circumstances, not be disinfected sufficiently anymore.
  - We recommend to replace damaged upholstery parts.

You can get information on tested and permitted disinfectants and procedures at your national facility for health protection.

- During the use of disinfectants it can happen that surfaces might be affected in such a fashion that the long term functionality of parts can be limited.
- In doing so the manufacturers instructions are to be observed.

REPAIRS

Repairs are generally to be carried out by a specialist dealer.

Repairs

Trustingly contact your specialist dealer for maintenance work. He has been introduces to the maintenance.

Customer Service

In case you have any questions or need help please contact your specialist dealer who can assume counselling, customer service and repairs.

Spare parts

Spare parts can only be ordered from specialist dealers. In case of repair work, only original spare parts are to be used!

➔ Spare parts from other manufacturers can cause malfunctions.

The spare parts list with the respective part numbers and drawings is available at the specialist dealer.

In order to ensure the correct delivery of a spare part, always quote the corresponding serial number (SN) of the rollator! You will find this on the type plate.

Whenever a wheelchair repair is carried out by the specialist dealer, the supplementary information, e.g. assembly/operating instructions must be attached to the operating manual for the wheelchair, the date of the repair must be recorded and stated when ordering spare parts.

This should prevent wrong order details on future spare parts orders.

Information for extended pauses of use

No special measures are required during extended pauses of use. Nevertheless storage temperatures are to be observed.

➔ For this observe chapter *Technical data* on page 49.

DISPOSAL

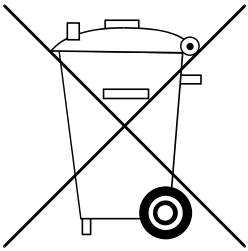

The disposal must comply with the respective national law.

Please enquire about local disposal arrangements at your municipal authority.

Parts made of carbon must be disposed of separately and can be recycled through us.

MAINTENANCE

An incorrect or neglected cleaning and maintenance of the wheelchair results in a limitation of the product liability.

Maintenance

The following maintenance Instruction gives you a guide for carrying out the maintenance work.

- The maintenance plan does not give information about the actual extent of work determined on the wheelchair.
- In all cases of inspection or maintenance there is a danger that you injure yourself or others unintentionally. – Therefore all inspection and maintenance is to be carried out with the indicated care.

Maintenance schedule

WHEN	WHAT	REMARK
Before starting out	General Test for faultless operation.	Carry out test yourself or with a helper.
Before starting out	Test brakes for faultless operation. Activate brake lever to the limit.	Carry out test yourself or with a helper. The locked wheels should not be able to turn under operating conditions. If they can still turn, the brakes must be repaired by an authorised specialist workshop.
Before starting out	Check pressure brake for wear. Move brake lever to the side.	Carry out tests yourself or have a helper do it. If you notice any increasing slackness on the brake lever take the wheelchair to your specialist workshop immediately for repairs. – Danger of accidents!
Before starting out (when applicable)	Check air pressure of the tyres. Tyre filling pressure: View *Tyre pressure of pneumatic tyres* on page 49.	Carry out test yourself or with a helper. Use a tyre gauge.

WHEN	WHAT	REMARK
Before starting out	Check tyre profile.	Carry out visual check yourself. If the tyre profile is worn down or if the tyre is damaged, consult a specialist workshop for repairs.
Before starting out	Check the back tubes and frame tubes for damages.	Carry out the test yourself or by a helper. If deformations or cracks occur in the welding seams, contact a specialist workshop immediately for repairs. – Danger of accidents!
While driving	Suddenly occurring crunching sounds in the frame and/or a change in driving behaviour	Immediately contact a specialist workshop.
Especially before driving in the dark (when applicable)	Check the lighting. Check the lighting equipment and reflectors for flawless functioning.	Carry out test yourself or with a helper.
Every 8 weeks (depending on frequency of use)	Lubricate the following components with a few drops of oil. Moving parts of the locking mechanism. Brake lever bearings.	Do it yourself or with the aid of a helper. Components must be free from used oil residues before lubrication. Please ensure that excess oil does not contaminate the environment (e.g. your clothing).
Every 8 weeks (depending on frequency of use)	Check all screw connections for secure fit.	Carry out test yourself or with a helper.
Every 6 months (depending on frequency of use)	Check Cleanness. General condition.	 View cleaning. See Repairs.
Manufacturer recommendation: Every 12 months (depending on frequency of use)	Safety inspection Wheelchair.	To be carried out by the specialist dealer.

TECHNICAL DATA

All data given in the < *Technical data* > refers to the standard version.

The overall length depends on the position and size of the drive wheels.

If not noted otherwise the dimensions are determined with drive wheels of ø 600 mm (24“).

The widths were determined with a handrim distance of 15 mm.

Dimensional tolerance ±15 mm, ± 2°.

Short form of wheelchair dimensions:

SH = Seat height
SW = Seat width
SD = Seat depth
BH = Back support height

Calculation of the max. user weight:

The maximum total load is calculated on the basis of the unloaded weight of the wheelchair and the maximum passenger weight.

Additional weight due to subsequent additions or luggage reduce the maximum permissible passenger weight.

Example:

A driver wishes to take luggage with a weight of 5 kg. Thus, the maximum user weight is reduced by 5 kg.

Tyre pressure of pneumatic tyres

Maximum tyre pressure is printed on the tyres on each side.

Full tyre pressure – steering wheel

Standard:
2.5 - 3.5 bar = 2500 - 3500 hPa = 36 - 50 psi

Full tyre pressure – drive wheel

Standard:
3.0 - 4.0 bar = 3000 - 4000 hPa = 44 - 58 psi

Ultra-light running tyres:
6 bar = 6000 hPa = 87 psi

High pressure:
8 bar = 8000 hPa = 116 psi

Applied norms

The wheelchair corresponds with the current version of the norm:

- EN 12183
- ISO 7176-8
- ISO 7176-19 (not model 1.185)

➔ Assessment of the Crashtest, in which the wheelchair is attached to the retaining system of the vehicle, has been carried out according to the testing methods of annex D.

➔ The crash test has been conducted and accepted with following anchoring systems:

- 4-point anchoring system acc. to ISO 10542.

➔ The corresponding product accompanying documents are included with the product.

➔ The specific document for the anchoring system can also be viewed in the product specific category < *Operating manuals* > on our website < *www.meyra.com* >.

The applied parts and components we use are in compliance to EN 1021-2 for resistance against inflammation.

Data according to ISO for model 1.185 FEMTO X

	min.	max.
Overall length over leg support	810 mm	1130 mm
Overall width	450 mm	760 mm
Overall dimensions	– kg	145 kg
User weight (incl. additional load)	– kg	130 kg
Weight of the heaviest part	0 kg	1.2 kg
Actual seat depth	340 mm	500 mm
Actual seat width	280 mm	520 mm
Folding length	720 mm	920 mm
Folding width	290 mm	300 mm
Folding height	470 mm	670 mm
Seat surface height at front edge (without cushion)	390 mm	540 mm
Seat angle	1°	15°
Back support angle	80°	100°
Back support height, standard back support	250 mm	500 mm
Back support height, adjustable back	250 mm	500 mm
Foot support to seat (lower shank length)	360 mm	480 mm
Static stability downhill (The braking test was conducted according to norm with 7° tilt)	–°	6°
Static stability uphill	–°	6°
Static stability lateral	–°	6°
Dynamic stability uphill	–°	6°
Angle leg support - seat surface	0°	0°
Arm support height from seat surface	0 mm	0 mm
Back support to front edge of arm support	0 mm	0 mm
Handrim diameter	540 mm	590 mm
Axle horizontal position	– mm	– mm
Obstacle height (from 40 mm only with an accompanying person)	30 mm	120 mm

	min.	max.
Minimal turning radius (normative recommendation according to ISO 1000 mm)	960 mm	1000 mm
Pivot area	– mm	1280 mm
Weight of the dummy (ISO 7176-8)	– kg	125 kg

Further technical data for model 1.185 FEMTO X

	min.	max.
Length without leg support	670 mm	830 mm
Overall height	640 mm	1040 mm
Seat cushion thickness	30 mm	60 mm
Length without drive wheels (Support castors are removed or swivelled underneath the seat)	0 mm	0 mm
Additional load	– kg	10 kg
Empty weight	9.5 kg	15 kg
Transport weight (without cushion, drive wheels)	7.5 kg	– kg
Weight seat cushion	0.9 kg	– kg
Weight drive wheels (1 piece)	1.2 kg	2.4 kg
Steering wheel		
ø 100 mm (4")		Solid rubber
ø 125 mm (5")		Solid rubber
Driving wheel		
ø 610 mm (24")		Pneumatic tyres
ø 635 mm (25")		Pneumatic tyres
ø 660 mm (26")		Pneumatic tyres
Height of push-handles		
Code 502 (steplessly adjustable)	0 mm	1040 mm
Climatic data		
Ambient temperature		-20 °C to +50 °C
Storage temperature		-30 °C to +65 °C

Data according to ISO for model 1.186 FEMTO S

	min.	max.
Overall length over leg support	790 mm	1105 mm
Overall width	450 mm	760 mm
Overall dimensions	– kg	145 kg
User weight (incl. additional load)	– kg	130 kg
Weight of the heaviest part	1.2 kg	– kg
Actual seat depth	340 mm	500 mm
Actual seat width	280 mm	520 mm
Folding length	720 mm	920 mm
Folding width	290 mm	300 mm
Folding height	470 mm	670 mm
Seat surface height at front edge (without cushion)	390 mm	540 mm
Seat angle	1°	15°
Back support angle	80°	100°
Back support height, standard back support	–	–
Back support height, adjustable back	250 mm	450 mm
Foot support to seat (lower shank length)	360 mm	480 mm
Static stability downhill (The braking test was conducted according to norm with 7° tilt)	–°	6°
Static stability uphill	–°	6°
Static stability lateral	–°	6°
Dynamic stability uphill	–°	6°
Angle leg support - seat surface	92°	100°
Arm support height from seat surface	0 mm	0 mm
Back support to front edge of arm support	0 mm	0 mm
Handrim diameter	540 mm	590 mm
Axle horizontal position	-15 mm	145 mm
Obstacle height (from 40 mm only with an accompanying person)	30 mm	120 mm

	min.	max.
Minimal turning radius (normative recommendation according to ISO 1000 mm)	960 mm	1000 mm
Pivot area	– mm	1280 mm
Weight of the dummy (ISO 7176-8)	– kg	125 kg

Further technical data for model 1.186 FEMTO S

	min.	max.
Length without leg support	790 mm	1105 mm
Overall height	640 mm	1040 mm
Seat cushion thickness	30 mm	60 mm
Length without drive wheels (Support castors are removed or swivelled underneath the seat)	0 mm	0 mm
Additional load	– kg	10 kg
Empty weight	9.5 kg	15 kg
Transport weight (without cushion, drive wheels)	7.5 kg	– kg
Weight seat cushion	0.9 kg	– kg
Weight drive wheels (1 piece)	1.2 kg	2.4 kg
Steering wheel		
ø 100 mm (4")		Solid rubber
ø 125 mm (5")		Solid rubber
Driving wheel		
ø 610 mm (24")		Pneumatic tyres
ø 635 mm (25")		Pneumatic tyres
ø 660 mm (26")		Pneumatic tyres
Height of push-handles		
Code 502 (steplessly adjustable)	0 mm	1040 mm
Climatic data		
Ambient temperature		-20 °C to +50 °C
Storage temperature		-30 °C to +65 °C

Meaning of the symbols on the washing instruction
(the symbols correspond to European standard)



Wash as delicates with the indicated maximum temperature in °C.



Wash as regular laundry with the indicated maximum temperature in °C.



Hand wash only



Do not bleach.



Not suited for the dryer.



Do not iron.



Do not dry-clean.

Meaning of the labels on the wheelchair



Read the operating manuals and other provided documentation.

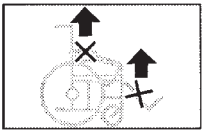

Do not lift the wheelchair at the arm supports or leg supports.
Removable parts are not suitable for carrying.



The product is approved as a seat within a motor vehicle.



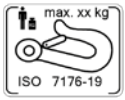

Anchor point for handicapped transport.



The product is **not** approved as a seat within a motor vehicle.



Indication for danger of jamming. – Do not reach in here.

Meaning of the symbols on the type plate



Manufacturer



Order number



Serial number



Production date



Permitted user weight



max. permissible total weight



Permitted axle weights



Max. permissible rising gradient



Max. permissible falling gradient

max. ... km/h

Permitted maximum speed



The product is approved as a seat within a motor vehicle.



Max. permitted user weight if the product is approved as a seat within a motor vehicle.



The product is **not** approved as a seat within a motor vehicle.



Medical device

INSPECTION CERTIFICATE

Wheelchair data:

Model:

Delivery note no.:

Serial-no.(SN):

Recommended safety inspection 1st. year (at least every 12 months)

Stamp of specialist dealer:

Signature: _____

Place, date: _____

_____

Next safety inspection in 12 months

Date: _____

Recommended safety inspection 2nd year (at least every 12 months)

Stamp of specialist dealer:

Signature: _____

Place, date: _____

_____

Next safety inspection in 12 months

Date: _____

Recommended safety inspection 3rd year (at least every 12 months)

Stamp of specialist dealer:

Signature: _____

Place, date: _____

_____

Next safety inspection in 12 months

Date: _____

Recommended safety inspection 4th year (at least every 12 months)

Stamp of specialist dealer:

Signature: _____

Place, date: _____

_____

Next safety inspection in 12 months

Date: _____

Recommended safety inspection 5th year (at least every 12 months)

Stamp of specialist dealer:

Signature: _____

Place, date: _____

_____

Next safety inspection in 12 months

Date: _____

WARRANTY / GUARANTEE

Failure to observe the instructions in the operating manual, improperly carried out maintenance work and, especially, technical changes and additions (add-ons) carried out without our prior consent will lead to a general loss of guarantee and product liability.

National warranty- / guarantee conditions between you and your specialist dealer can vary from the conditions mentioned in this chapter.

We accept legal liability for this product within the scope of or general terms and conditions and warranty and in certain cases other verbal resp. agreed upon guarantees. For warranty and guarantee demands please contact your specialist dealer with following Warranty/Guarantee section and the there included information on model description, delivery note number with delivery date and serial number (SN).

The serial number (SN) can be read off of the type plate.

Precondition for the acceptance of liability in any case is the intended use of the product, the use of original spare parts by authorised dealers as well as maintenance and inspections in regular intervals.

Guaranty is not granted for surface damages, tyres of the wheels, damages due to loosened screws or nuts as well as worn out attachment holes due to frequent assembly work.

Interferences through radiation sources such as mobile phones with high transmission power, HiFi-equipment and other extreme interference radiators outside of norm specifications cannot be declared as warranty or guarantee claims.

This operating manual as a part of the product is to be handed out in case of a change of owner.

For evaluation of our products you can use our < *Information center* > sector < *PMS* > on our website < www.meyra.com >.

We reserve the right to make technical improvements.

CE This product fulfils the requirements of the directive (EC) 2017/745 for medical devices.

Warrantee / Guarantee section

Please fill out! Copy if necessary and send the copy to the specialist dealer.

Warranty / Guarantee

Model designation:

Delivery note no.:

SN (view type plate):

Date of delivery:

Stamp of the specialist dealer:

Inspection certificate for transfer

Wheelchair data:

Serial-no.(SN):

Model:

Delivery note no.:

Stamp of specialist dealer:

Signature: _____

Place, date: _____

_____

Next safety inspection in 12 months

Date: _____

NOTES

NOTES

NOTES

Your specialist dealer

Original
Operating manual

MEYRA GmbH Kleiststraße 49 | 32457 Porta Westfalica | Deutschland
info@meyragroup.com | Tel.: +49 571 93292 - 311 | Fax: +49 571 93292 - 9311 | www.meyra.de

2025-03 Our products are subject to technical modification. Our printed matter may contain printing errors.
Parts-Nr. 205 353 001